TRAXON | ecue
MEMBER OF PROSPERITY GROUP

LUXPOINT® Linear Light (3CCT)

Datasheet

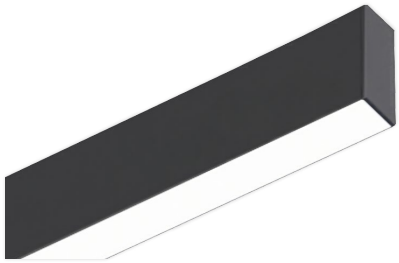

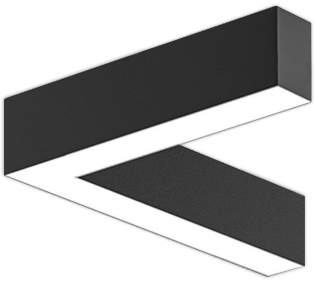

Suspended linear lights are sleek, elongated fixtures hung from ceilings, ideal for illuminating large spaces like dining rooms, kitchens, or offices. They provide even, direct, or direct/indirect lighting, blending functionality with modern aesthetics. Available in various lengths, finishes, and LED options, they offer energy efficiency and feature 3CCT technology, allowing users to switch between three color temperatures for customizable ambiance. Perfect for task or ambient lighting, these versatile fixtures enhance architectural details and suit both residential and commercial settings with their minimalist or artistic designs.

Benefits

- Versatile Application
- Energy Efficiency
- Versatility of Size

Applications

- Office
- Warehouse
- Hotel
- Shop
- Other demanding environments

Specifications are subject to change without notice. Errors and omission excepted, always make sure to use the most recent release.
©2023 TRAXON TECHNOLOGIES. ALL RIGHTS RESERVED

LUXPOINT® Linear Light (3CCT)
Technical Data

Optical Specifications

Wattage		18W	36W
Luminous Flux @CCT	**3000K**	1350lm	3240lm
	4000K	1350lm	3240lm
	5000K	1350lm	3240lm
Efficacy		90lm/W	
Flickering metric (Pst LM)		<1	
Stroboscope effect metric (SVM)		<0.4	
CRI		≥80	
SDCM		< 6	
Beam Angle		100°	
Photobiological safety group acc. To EN62778		RG0	
Photobiological safety group acc. To EN62471		RG0	
Dimmable		Switchable (100%/85%/70%)	

Electrical and Mechanical Specifications

Input Voltage	220-240V ~50/60Hz	
Nominal Current	87mA	174mA
Power Factor	0.9	0.9
Protection class	Class I	Class I
Dimensions	L 286mm	L 1130mm
	W 286mm	W 35mm
	H 80mm	H 80mm
Housing	Aluminium	
Diffuser	Polystyrene (PS)	
Replaceable light source	No	
Replaceable Control gear	No	
Glow wire test according to IEC60695-2-12	650°C	

System Specifications

Power	AC mains
Operating Temperature	-10°C ~ 40°C
Storage Temperature	-20°C ~ 60°C
Lifespan L70/B50 at 40°C	30000 hours
Lifespan L70/B50 at 25°C	50,000 hours
Number of switching cycles	15,000
Environment	Indoor
Safety Approval	CE, UKCA, RoHS
Mercury content	0.0mg
Warranty	2 years

LUXPOINT® Linear Light (3CCT)

Dimension (Unit: mm)

36W

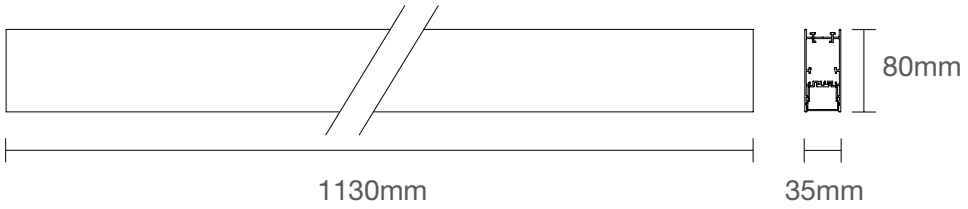

18W

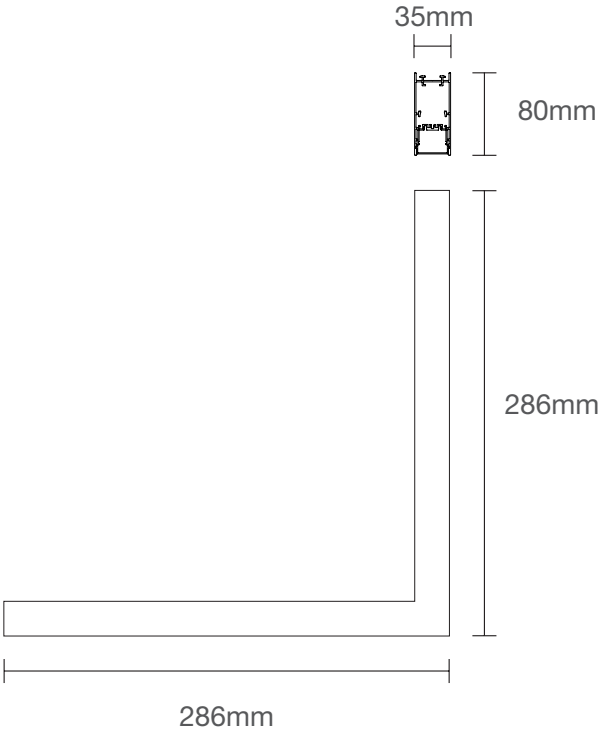

Due to the special conditions of manufacturing process of LED, the typical data of technical parameters can only reflect statistical figures and do not necessarily correspond to the actual parameters of each single product which could differ from typical data.

Exceeding maximum ratings for operation voltage will cause hazardous overload and will likely destroy the LED module.

Exceeding maximum ratings for operation and storage temperature will reduce expected life time or destroy the LED module.

Specifications are subject to change without notice. Errors and omission excepted, always make sure to use the most recent release.

©2023 TRAXON TECHNOLOGIES. ALL RIGHTS RESERVED

LUXPOINT® Linear Light (3CCT)
Ordering codes

Model No.	Wattage	CCT	Lumen	Size(mm)	Item code	EAN-13
LP LS 3580P-1130 36W 830/840/850 DIM BL	36W	3000K/4000K/5000K	3420lm	1130x35x80	TXGL25300061055	4897135738993
LP LS 3580P-L286 18W 830/840/850 DIM BL	18W	3000K/4000K/5000K	1350lm	286x286x80	TXGL25300061155	4897135739006

Service contact:
Traxon Technologies Ltd.
Room 113, Wireless Centre, 3 Science Park East Avenue, Shatin,
Hong Kong, China
www.traxon-ecue.com

Traxon Technologies Europe GmbH
Karl-Schurz-Str. 38, 33100 Paderborn, Germany

TRAXON | ecue
MEMBER OF PROSPERITY GROUP